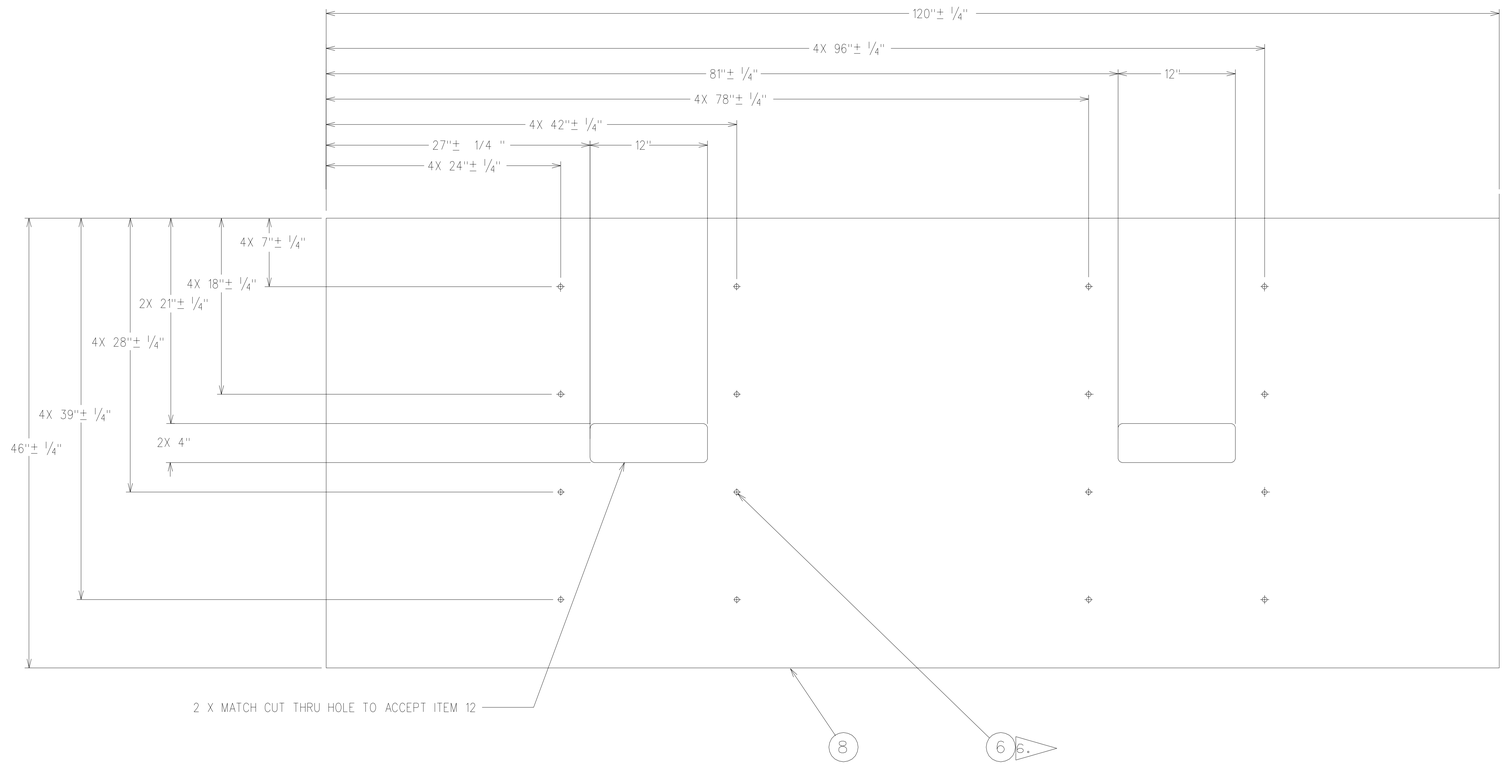

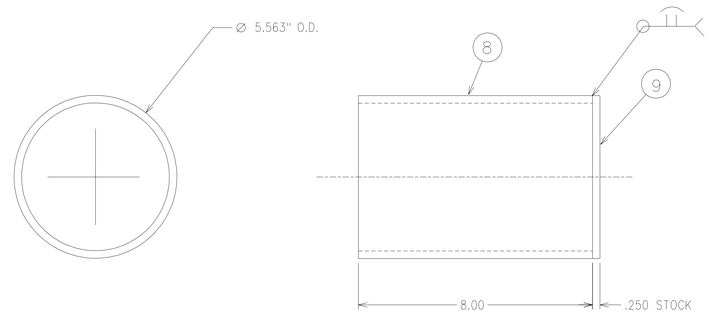

POCKET

SCALE 1/2

4 REQUIRED

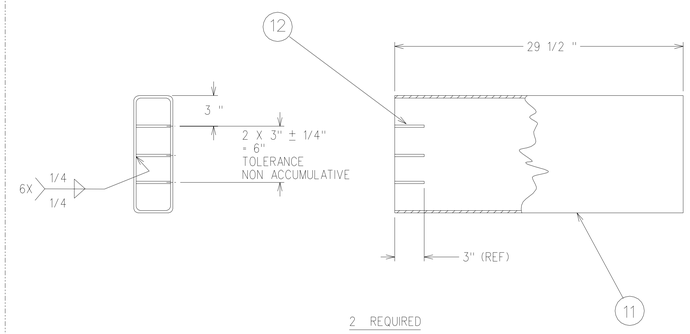

2 REQUIRED

ROD LOCATION					
ROD NO.	"X" DIM. ±1/4"	"Y" DIM. ±1/4"	ROD NO.	"X" DIM. ±1/4"	"Y" DIM. ±1/4"
1	5 1/4	5 3/4	37	60	40 1/4
2	5 1/4	22 1/4	38	68 1/4	4 1/4
3	5 1/4	40 1/4	39	68 1/4	10 1/4
4	9 3/4	16 1/4	40	68 1/4	22 1/4
5	9 3/4	29 3/4	41	68 1/4	35 3/4
6	15 1/2	4 1/4	42	68 1/4	41 3/4
7	15 1/2	10 1/4	43	74 1/4	5 3/4
8	15 1/2	22 1/4	44	74 1/4	16 1/4
9	15 1/2	35 3/4	45	74 1/4	29 3/4
10	21 1/2	5 3/4	46	74 1/4	40 1/4
11	21 1/2	16 1/4	47	80 1/4	4 1/4
12	21 1/2	29 3/4	48	80 1/4	10 1/4
13	27 1/2	4 1/4	49	80 1/4	35 3/4
14	27 1/2	10 1/4	50	80 1/4	41 3/4
15	27 1/2	35 3/4	51	86 1/4	5 3/4
16	27 1/2	41 3/4	52	86 1/4	16 1/4
17	33 1/2	5 3/4	53	86 1/4	29 3/4
18	33 1/2	16 1/4	54	86 1/4	40 1/4
19	33 1/2	29 3/4	55	92 1/4	4 1/4
20	33 1/2	40 1/4	56	92 1/4	10 1/4
21	39 1/2	4 1/4	57	92 1/4	35 3/4
22	39 1/2	10 1/4	58	92 1/4	41 3/4
23	39 1/2	35 3/4	59	98 1/4	5 3/4
24	39 1/2	41 3/4	60	98 1/4	16 1/4
25	45 1/2	5 3/4	61	98 1/4	29 3/4
26	45 1/2	16 1/4	62	98 1/4	40 1/4
27	45 1/2	29 3/4	63	104 1/4	4 1/4
28	45 1/2	40 1/4	64	104 1/4	10 1/4
29	51 1/2	4 1/4	65	104 1/4	22 1/4
30	51 1/2	10 1/4	66	104 1/4	35 3/4
31	51 1/2	22 1/4	67	110 1/4	16 1/4
32	51 1/2	35 3/4	68	110 1/4	29 3/4
33	51 1/2	41 3/4	69	114 3/4	5 3/4
34	60	5 3/4	70	114 3/4	22 1/4
35	60	16 1/4	71	114 3/4	40 1/4
36	60	29 3/4			

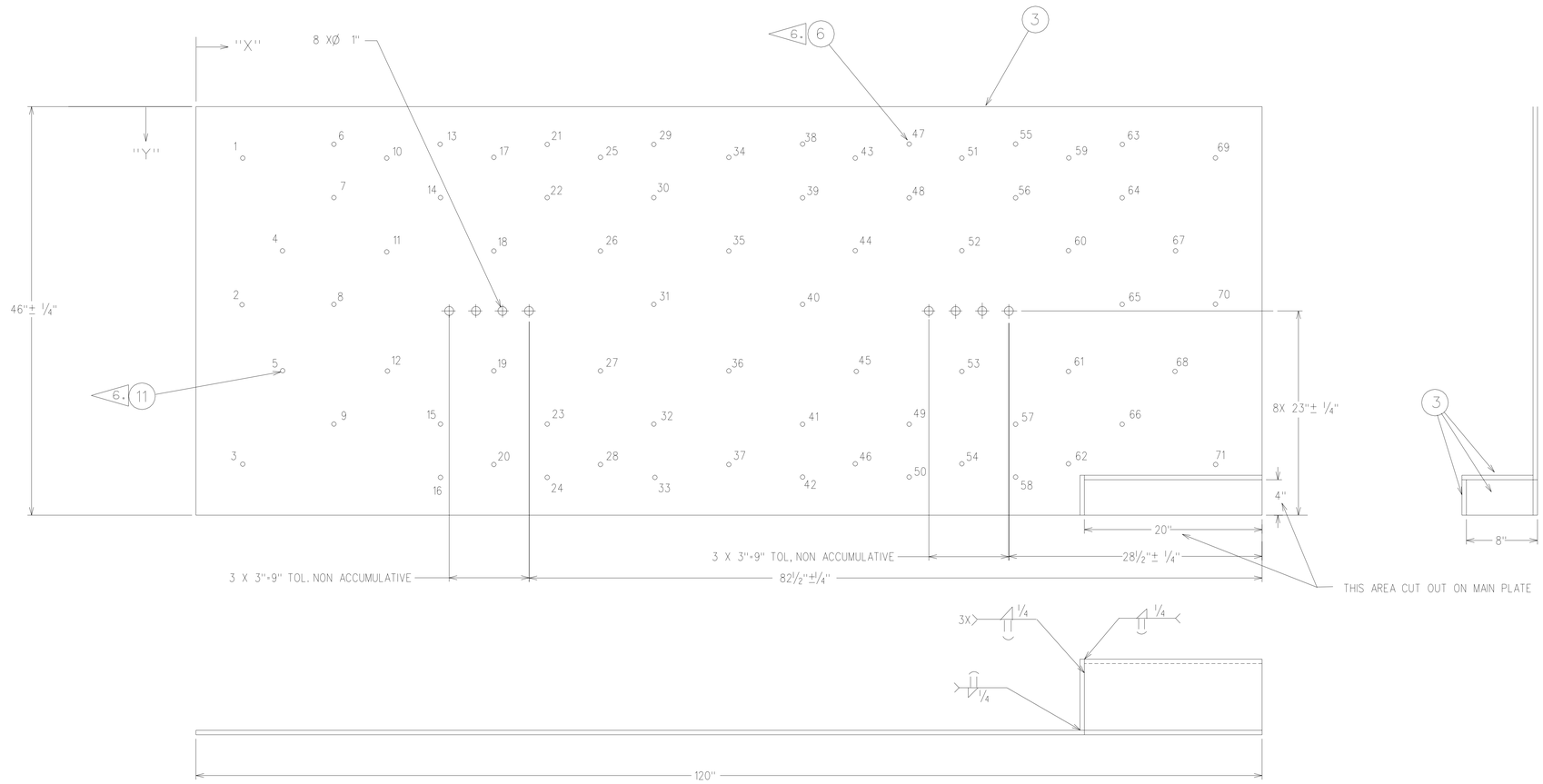

DRAWING NUMBER R68659		
DRAWING CLASSIFICATION UNCLASSIFIED		
SIZE E	CAGEC 14213	SCALE NONE
	ISSUE A	SHEET 3 OF 3
STATUS SA-REL-05/15/02		