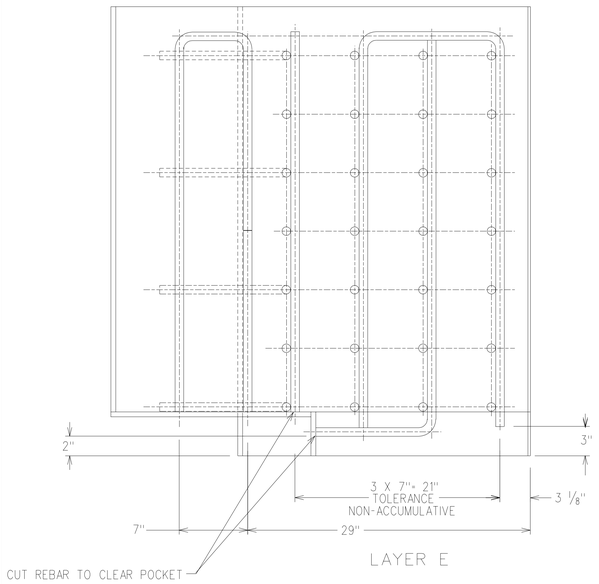

LAYER E

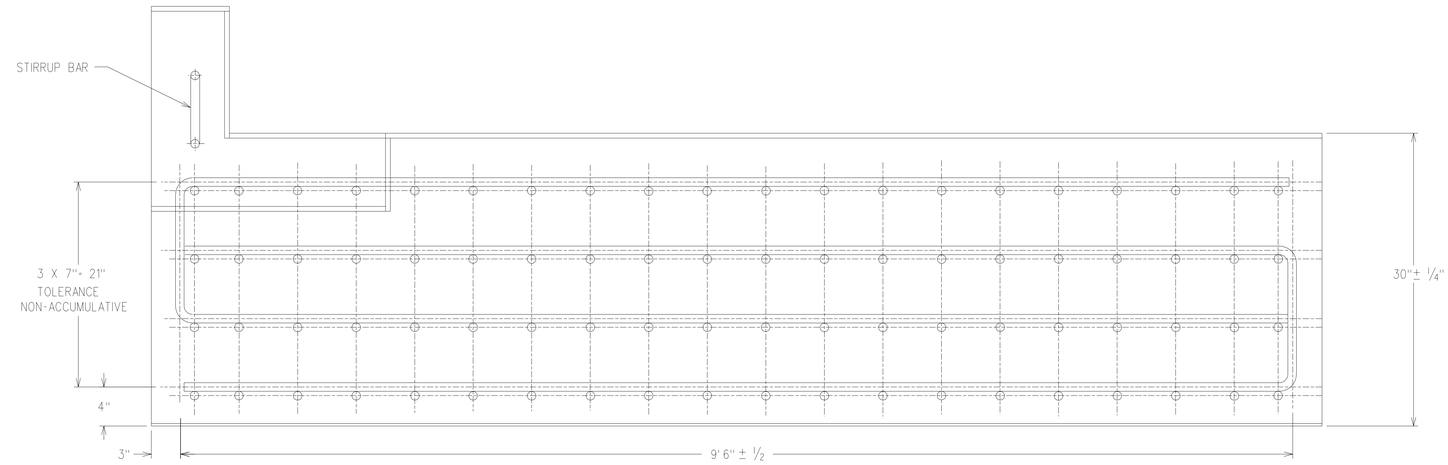

LAYER B

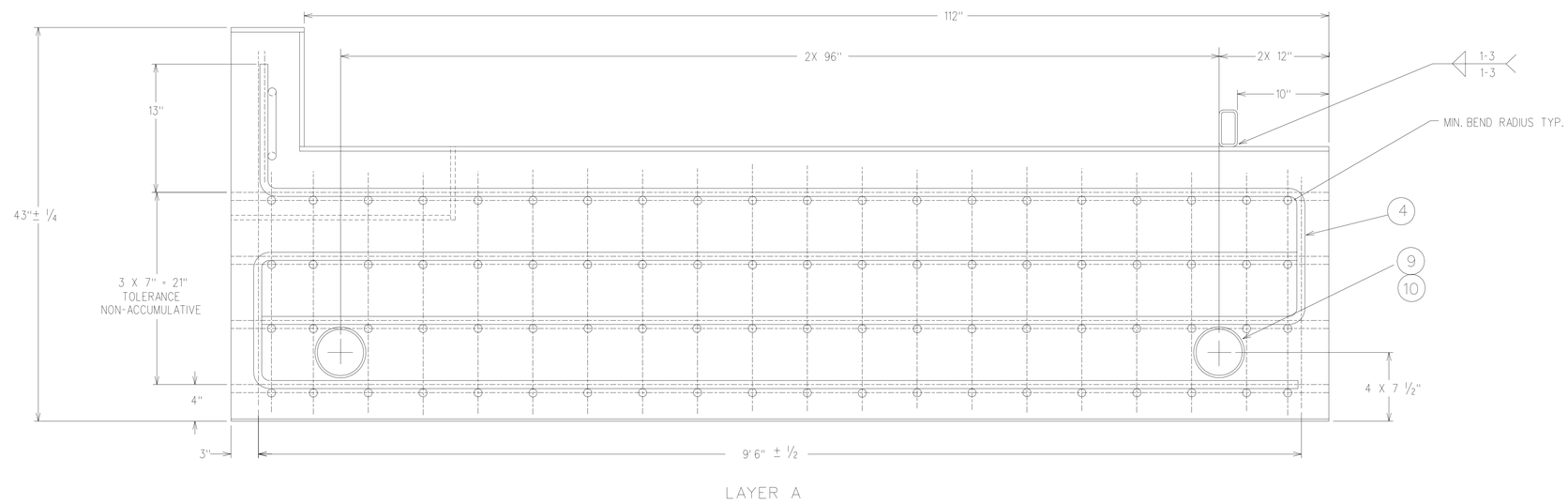

LAYER A

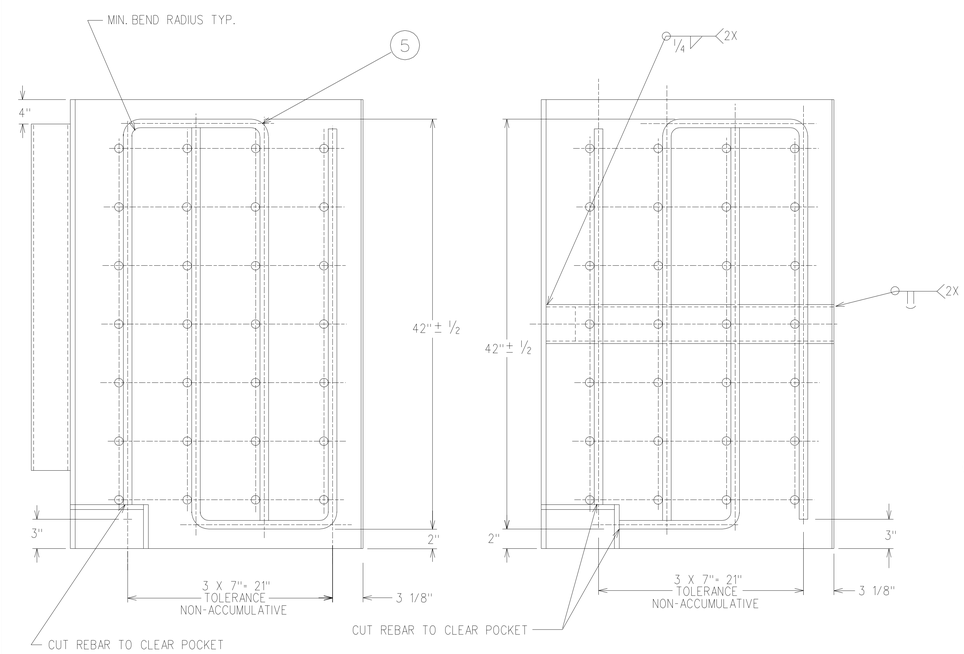

LAYER D

LAYER C

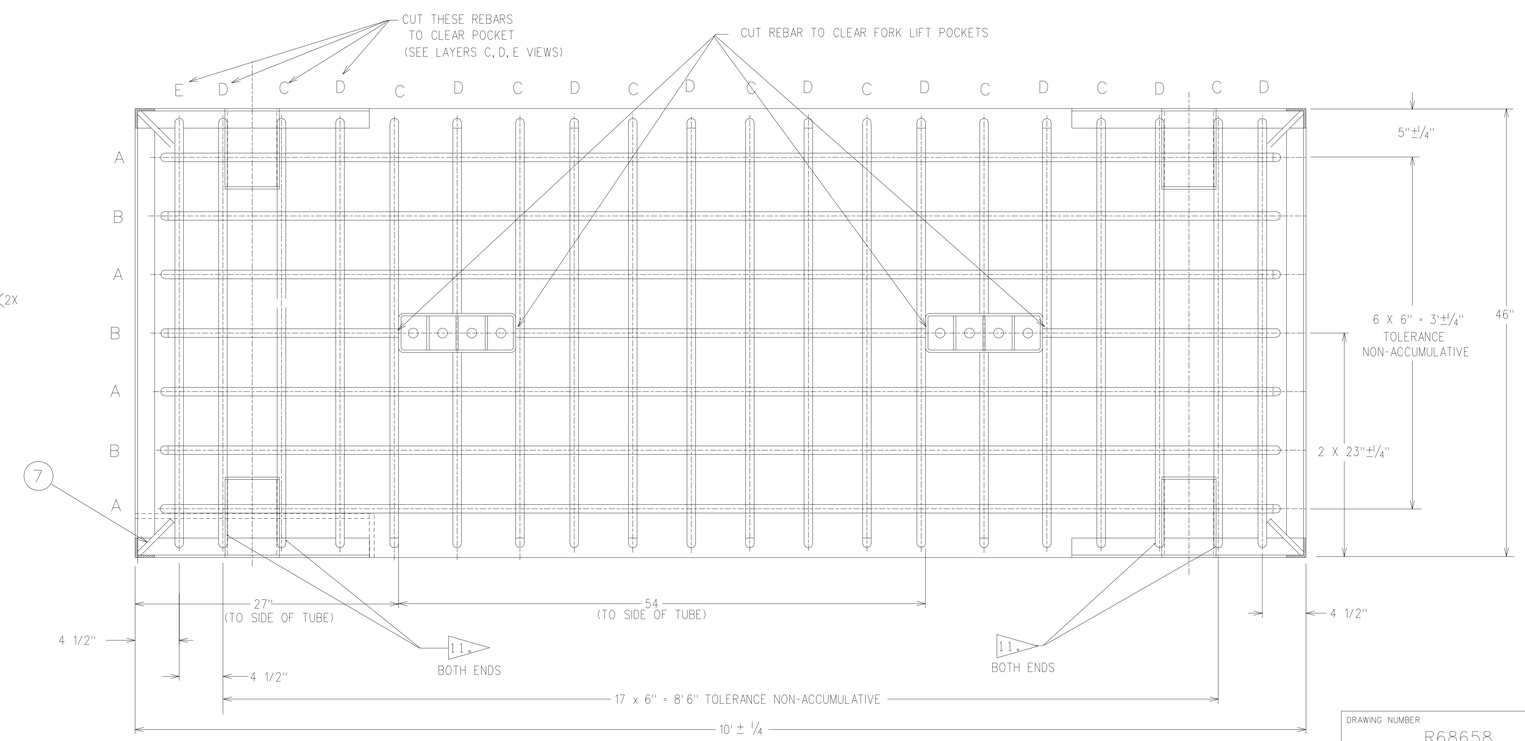

DRAWING NUMBER R68658		
DRAWING CLASSIFICATION UNCLASSIFIED		
SIZE E	CAGEC 14213	SCALE 1/6
	ISSUE A	SHEET 2 OF 4
STATUS SA-REL-05/14/02		