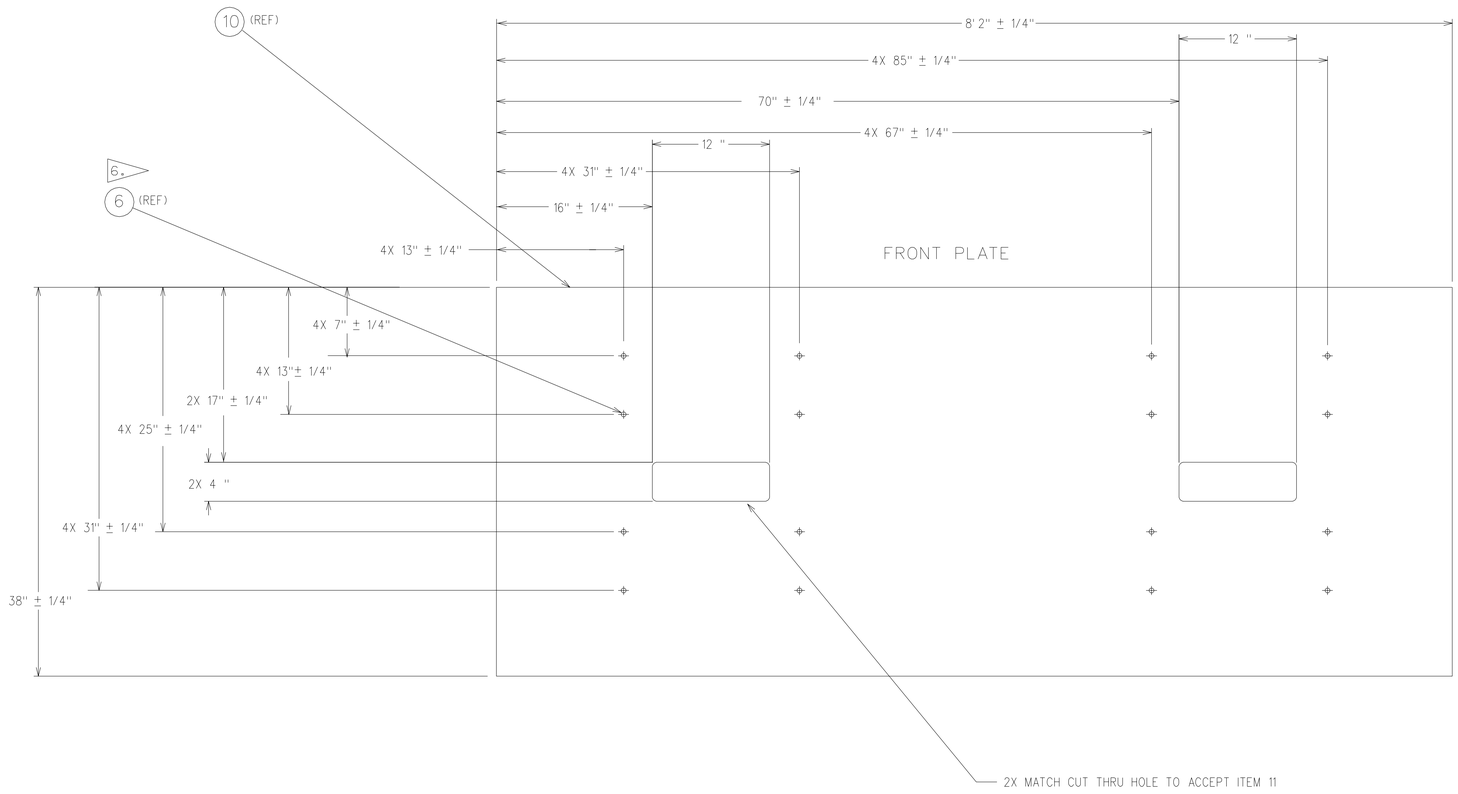

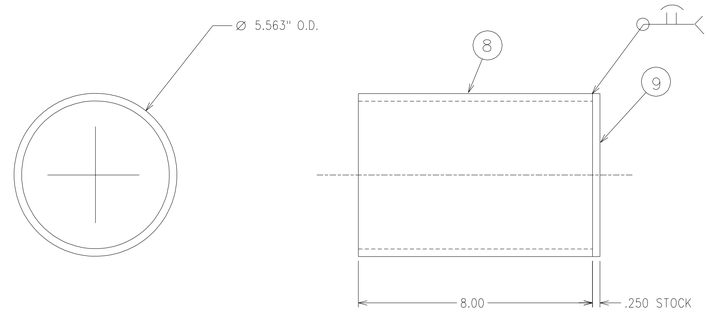

POCKET
SCALE 1/2

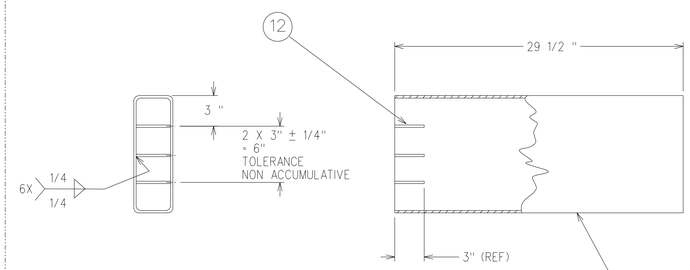

2 REQUIRED

ROD LOCATION		
ROD NO.	"X"± 1/4 DIM.	"Y"±1/4 DIM.
1	4 7/8"	11 1/8"
2	4 7/8"	21 5/8"
3	4 7/8"	29 1/4"
4	4 7/8"	40 3/16"
5	7 7/8"	17 3/16"
6	7 7/8"	33 3/16"
7	16 7/8"	11 1/8"
8	16 7/8"	21 5/8"
9	16 7/8"	29 1/4"
10	16 7/8"	40 3/16"
11	22 3/4"	17 3/16"
12	22 3/4"	33 3/16"
13	28 7/8	11 1/8"
14	28 7/8	21 5/8"
15	28 7/8	29 1/4"
16	28 7/8	40 3/16"
17	34 7/8"	17 3/16"
18	34 7/8"	33 3/16"
19	40 7/8"	11 1/8"
20	40 7/8"	21 5/8"
21	40 7/8"	29 1/4"
22	40 7/8"	40 3/16"
23	49"	17 3/16"
24	49"	33 3/16"
25	57 1/4"	11 1/8"
26	57 1/4"	21 5/8"
27	57 1/4"	29 1/4"
28	57 1/4"	40 3/16"
29	63 1/4"	17 3/16"
30	63 1/4"	33 3/16"
31	69 1/4"	11 1/8"
32	69 1/4"	21 5/8"
33	69 1/4"	29 1/4"
34	69 1/4"	40 3/16"
35	75 1/4"	17 3/16"
36	75 1/4"	33 3/16"
37	81 1/4"	11 1/8"
38	81 1/4"	21 5/8"
39	81 1/4"	29 1/4"
40	81 1/4"	40 3/16"
41	90 1/4"	17 3/16"
42	90 1/4"	33 3/16"
43	93 1/4"	11 1/8"
44	93 1/4"	21 5/8"
45	93 1/4"	29 1/4"
46	93 1/4"	40 3/16"

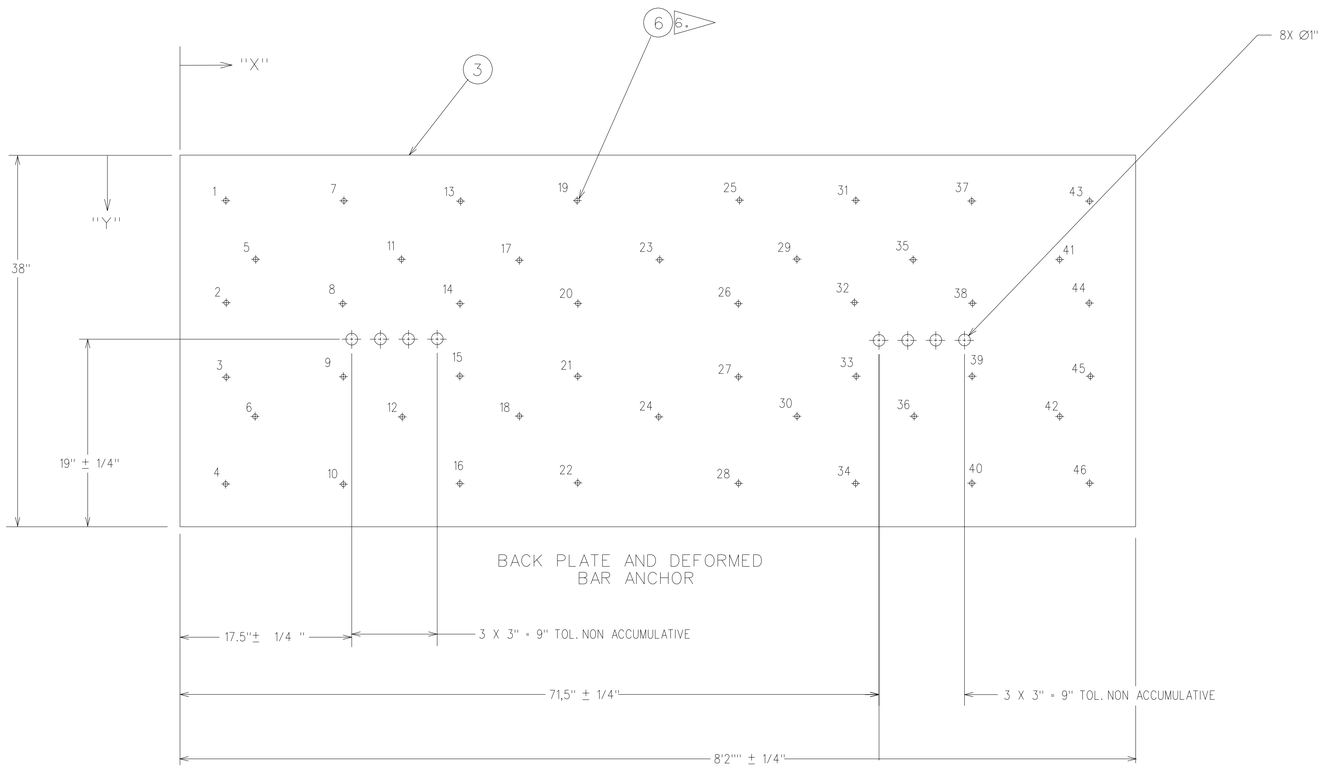

DRAWING NUMBER R68326		
DRAWING CLASSIFICATION UNCLASSIFIED		
SIZE E	CAGEC 14213	SCALE 1/6
	ISSUE A	SHEET 3 OF 3
STATUS SA-REL-04/11/02		