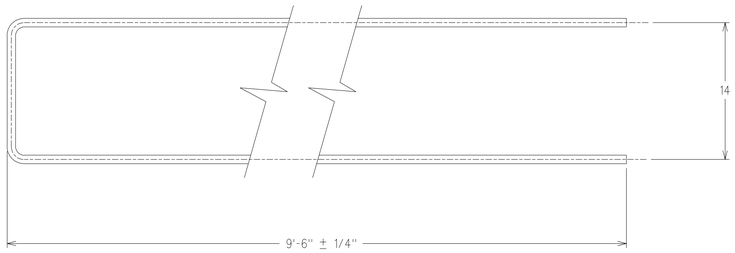

ITEM 4

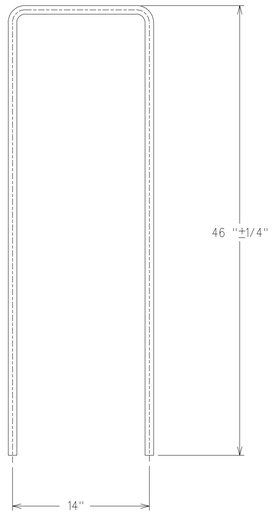

ITEM 5

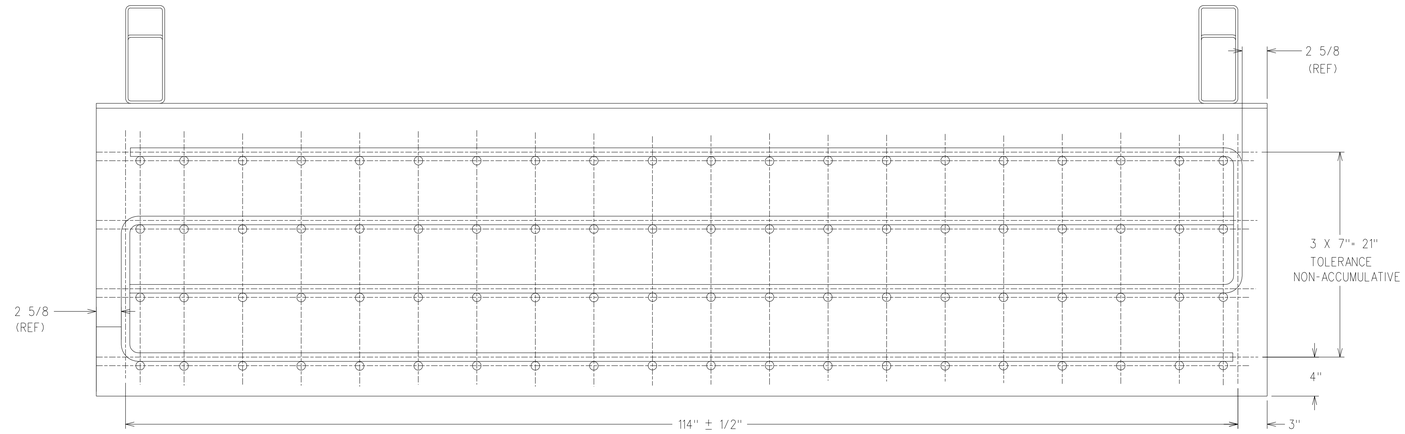

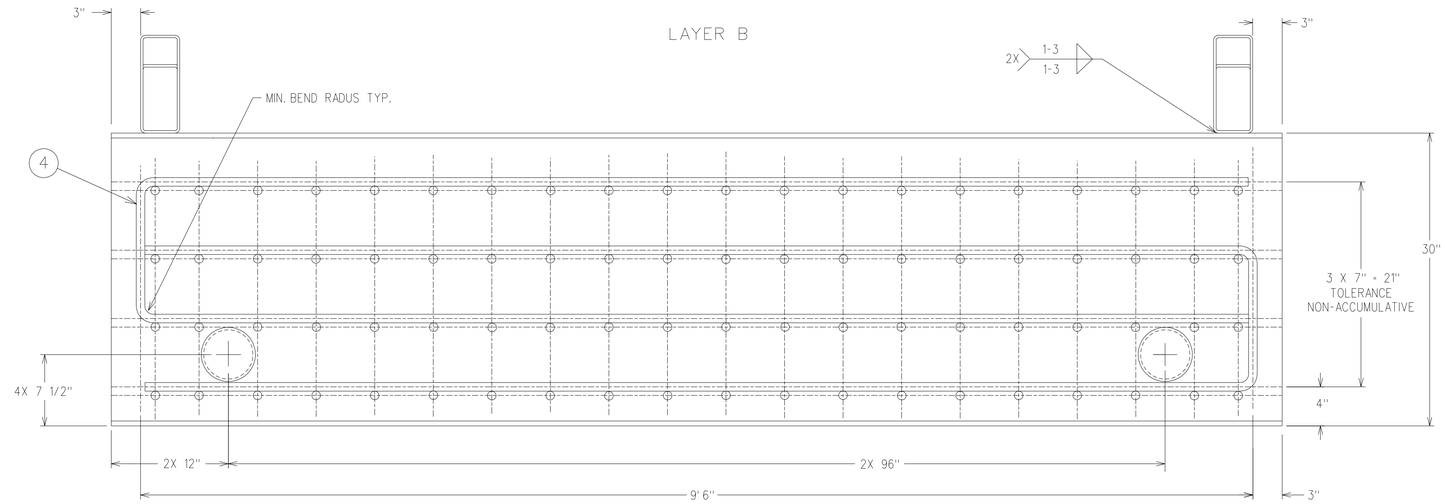

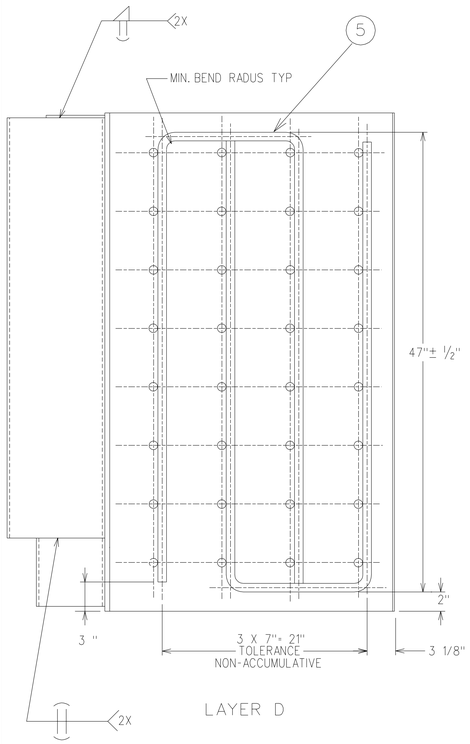

LAYER D

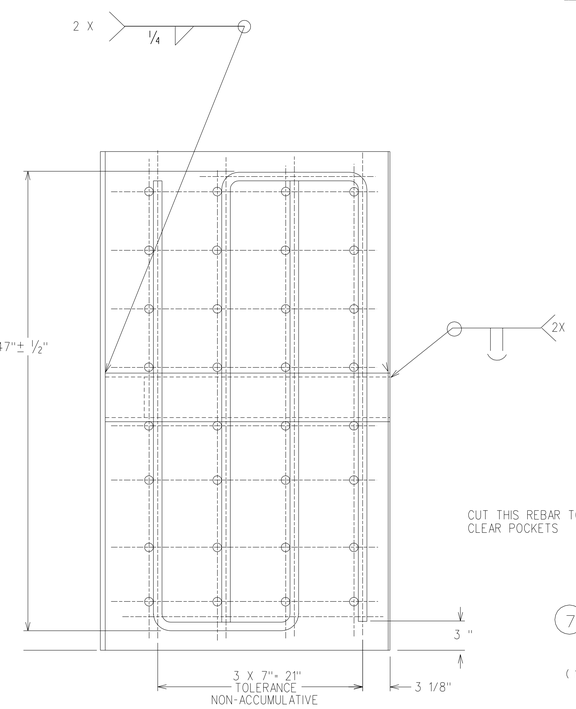

LAYER C

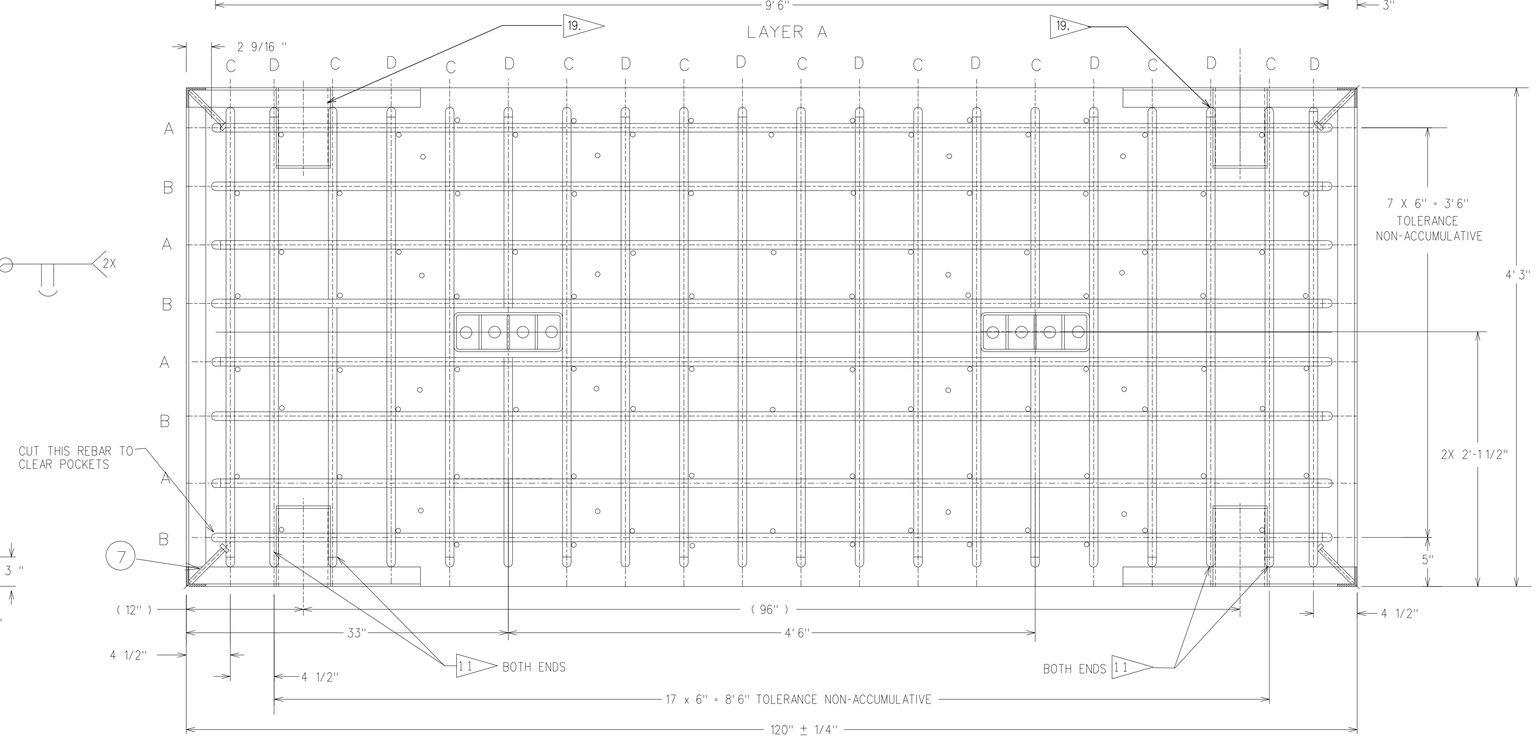

DRAWING NUMBER R68325		
DRAWING CLASSIFICATION UNCLASSIFIED		
SIZE E	CAGEC 14213	SCALE NONE
	ISSUE A	SHEET 2 OF 4
STATUS SA-REL-04/11/02		