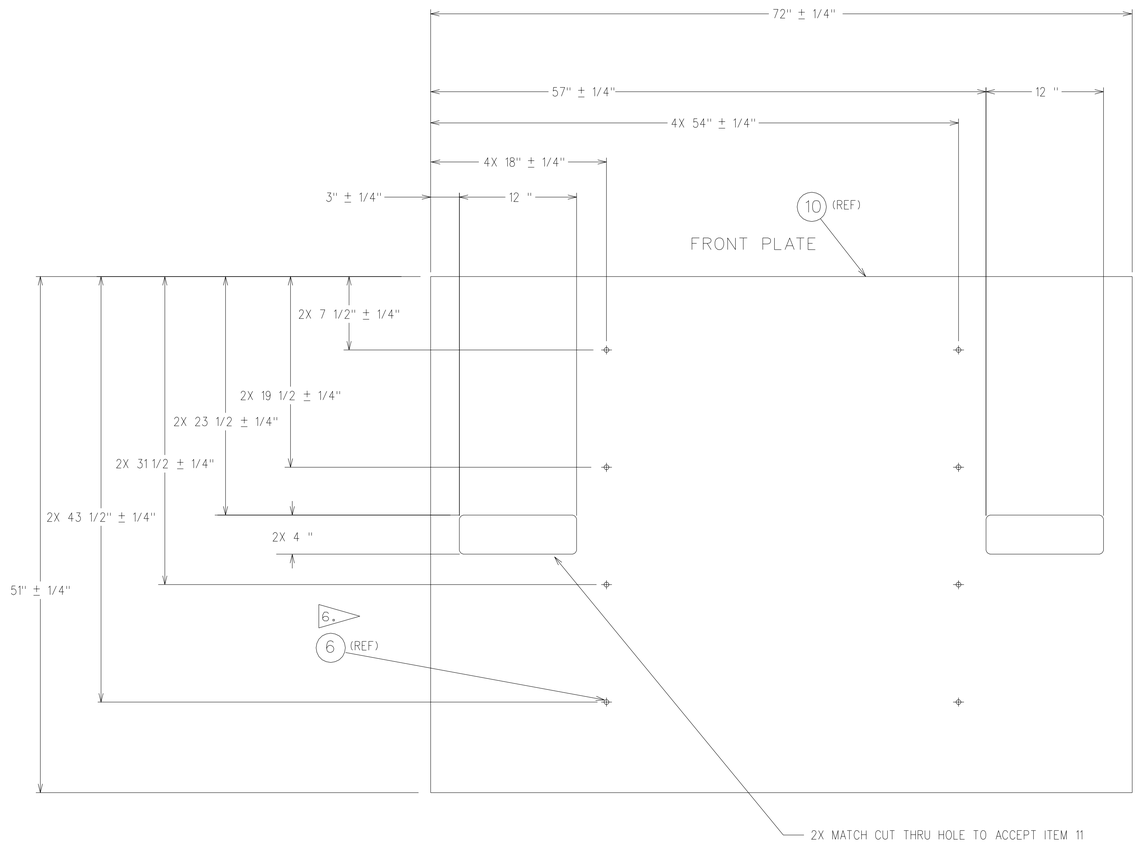

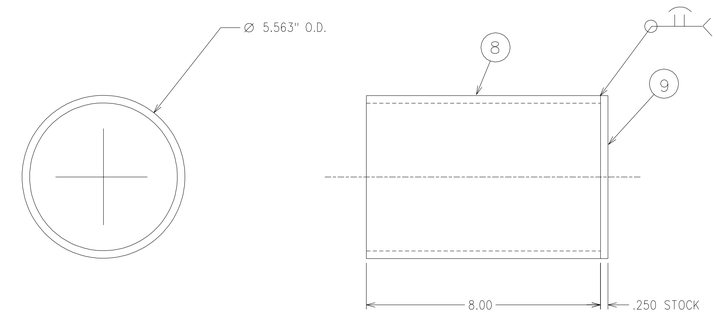

POCKET
SCALE 1/2

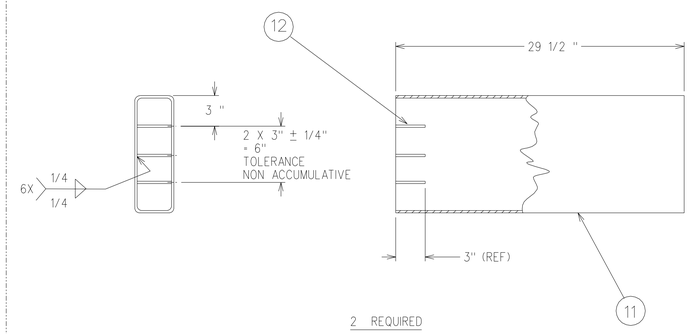

2 REQUIRED

ROD LOCATION		
ROD NO.	"X"± 1/4 DIM.	"Y"±1/4 DIM.
1	3 7/8"	11 1/8
2	3 7/8"	21 5/8
3	3 7/8"	29 1/4
4	3 7/8"	40 3/16
5	9 3/4"	17 3/16
6	9 3/4"	33 3/16
7	15 7/8"	3 5/8
8	15 7/8"	11 1/8
9	15 7/8"	21 5/8
10	15 7/8"	29 1/4
11	15 7/8"	40 3/16
12	15 7/8"	47 3/16
13	21 7/8"	5 1/8
14	21 7/8"	17 3/16
15	21 7/8"	33 3/16
16	21 7/8"	45 11/16
17	27 7/8"	3 5/8
18	27 7/8"	11 1/8
19	27 7/8"	21 5/8
20	27 7/8"	29 1/4
21	27 7/8"	40 3/16
22	27 7/8"	47 3/16
23	36"	5 1/8
24	36"	17 3/16
25	36"	33 3/16
26	36"	45 11/16
27	44 1/4"	3 5/8
28	44 1/4"	11 1/8
29	44 1/4"	21 5/8
30	44 1/4"	29 1/4
31	44 1/4"	40 3/16
32	44 1/4"	47 3/16
33	50 1/4"	5 1/8
34	50 1/4"	17 3/16
35	50 1/4"	33 3/16
36	50 1/4"	45 11/16
37	56 1/4"	3 5/8
38	56 1/4"	11 1/8
39	56 1/4"	21 5/8
40	56 1/4"	29 1/4
41	56 1/4"	40 3/16
42	56 1/4"	47 3/16
43	62 1/4"	17 3/16
44	62 1/4"	33 3/16
45	68 1/4"	11 1/8
46	68 1/4"	21 5/8
47	68 1/4"	29 1/4
48	68 1/4"	40 3/16

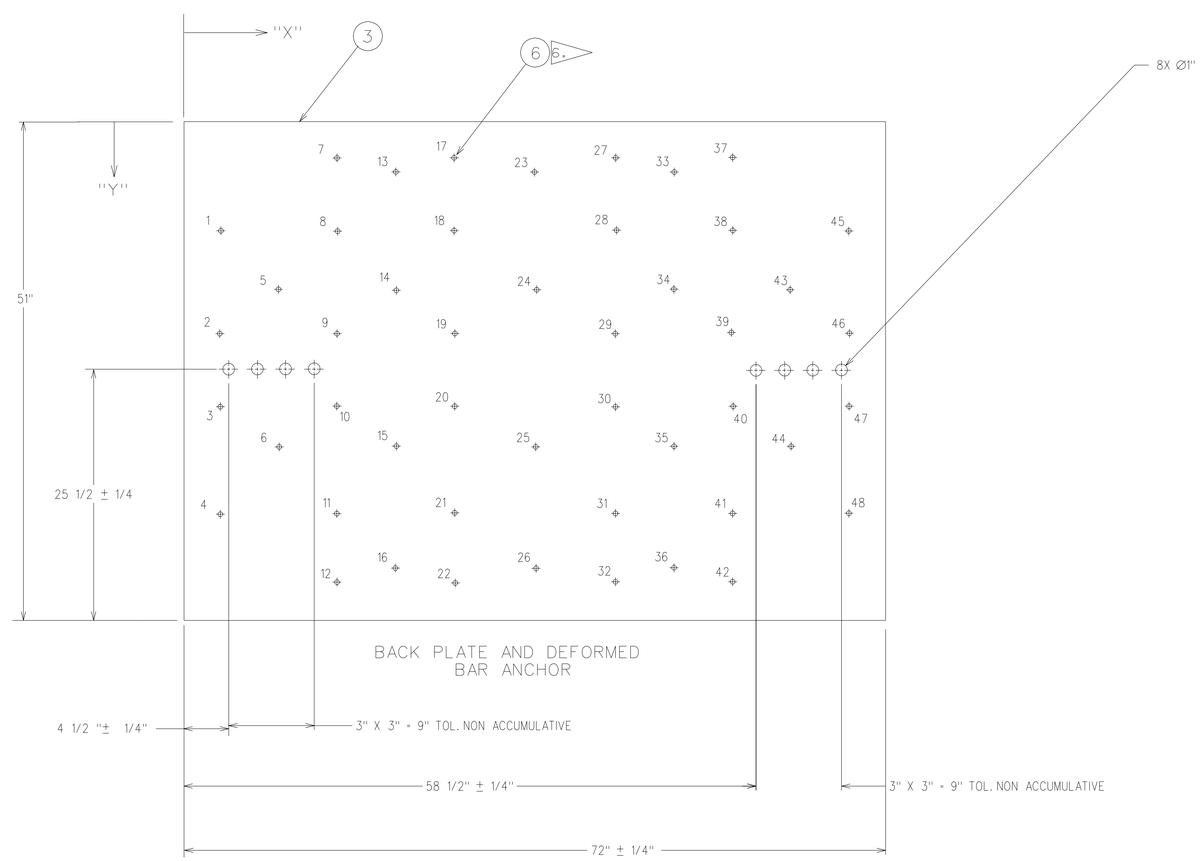

BACK PLATE AND DEFORMED
BAR ANCHOR

DRAWING NUMBER R68319		
DRAWING CLASSIFICATION UNCLASSIFIED		
SIZE E	CAGEC 14213	SCALE 1/6
	ISSUE A	SHEET 3 OF 3
STATUS SA-REL-04/11/02		