DESIGN AGENCY PART NUMBER	REVISIONS					
	ISS	SHEET ZONE	PREPARED BY / DESCRIPTION	DATE	CHKR	APVD
SEE TABULATION	A		C. MATTHEWS, 2996/ D. SWAHLAN, 5832			DS

11. ITEM 14 USED ON -200 ONLY, WELD TO ITEM 11 AND ITEMS 4 AND 5 WHERE CONVIENT.

12. APPROX. LOCATION OF PAINTED 4" HIGH NUMBER PAINT BLACK. PAINT FINISHED WEIGHT OF BLOCK ROUNDED TO THE NEAREST 100 #.

13. ALL PRE-CAST SURFACES SHALL BE TREATED WITH AN ACRYLIC SEALER.

14. WIRE TIE ALL REBAR LAYERS AND WIRE TIE DEFORMED BAR RODS TO REBAR LAYERS.

15. FRONT AND REAR STEEL PLATES ITEMS (3 AND 10) SHALL BE FLAT AND PARALLEL WITHIN + OR - 1/4 IN. FROM THEORETICAL PLANE.

16. AFTER ALL WELDING AND PAINTING IS COMPLETE, FILL VOIDS BETWEEN PLATES (ITEM 12) WITH POLYURETHANE FOAM (ITEM 13).

FOAM IS:

"GREAT STUFF", MINIMAL EXPANDING
DOW CHEMICAL CO.
1881 WEST OAK PARKWAY
MARIETA, GA. 30062

MAY BE PURCHASED AT HOME DEPOT

17. LIGHTLY SANDBLAST ALL EXPOSED STEEL SURFACES BEFORE CLEANING PER TT-C-490D. PRIME STEEL SURFACES PER MIL-PRF-23377, PRIMER COATINGS, EPOXY, HIGH-SOLIDS. TOPCOAT OF EPOXY PAINT PER MIL-PRF-22750F, COATING, EPOXY, HIGH-SOLIDS. COLOR: GRAY LUSTERLESS (36495) PER FED-STD-595. PAINTING ITEMS 8, 9, 11 AND 12 AFTER WELDING, BUT PRIOR TO FINIAL BLOCK ASSEMBLY IS OPTIONAL.

6. WELD DEFORMED BAR ANCHORS (ITEM 6) TO PLATE (ITEM 3 AND 10): PER MANUFACTURERS INSTRUCTIONS: WELD HEADED ANCHORS (ITEM 7) TO ANGLES (ITEM 2).

7. WELD AND INSPECT PER 9912119, CLASS II, USING E70XX ELECTRODES PER AWS A5.5-81 OR E70S-X ELECTRODES OR RODS PER AWS A5.18-79.

8. DIMENSIONAL TOLERANCES SHALL BE AS FOLLOWS: (UNLESS OTHERWISE NOTED)
   A. LINEAR DIMENSIONS ±1/8".
   B. OUT OF SQUARE ±1/8".
   C. ALL SURFACES SHALL BE FLAT WITHIN ±1/8" FROM THEORETICAL PLANE.

9. PROVIDE AT LEAST 1 1/2" COVER BY CONCRETE OF REINFORCING STEEL.

10. MINIMUM CONCRETE REQUIREMENTS:

4000 PSI @ 28 DAYS, 4.5 - 6% ENTRAINED AIR, CURED CONCRETE SHALL NOT EXCEED 142 LB. PER CU. FOOT (EXCLUSIVE OF STEEL REINFORCING). CUSTOMER MAY REQUEST TYPE III, HIGH EARLY STRENGTH CEMENT.

NOTES:

1. STEEL EDGES AND SURFACES TO BE GROUND OR PLACED FLUSH TO 1/16 INCH BELOW SURROUNDING CONCRETE SURFACES.

2. DO NOT CHAMFER CONCRETE EDGES, LEAVE SHARP.

3. MANUFACTURED BY NELSON STUD WELDING DIV., TRW INC. 7900 WEST RIDGE, P.O. BOX 4019, ELYRIA, OH 44036.

4. TWO ANCHORS (ITEM 7) PER ANGLE, LOCATED EQUALLY SPACED WITHIN RUN.

5. TACK WELD 60 RANDOM INTERSECTIONS OF ITEMS 4, 5, AND 6.

TABULATION	
PART NO.	CLASSIFICATION
R68319-100	UNCLASSIFIED
R68319-200	UNCLASSIFIED

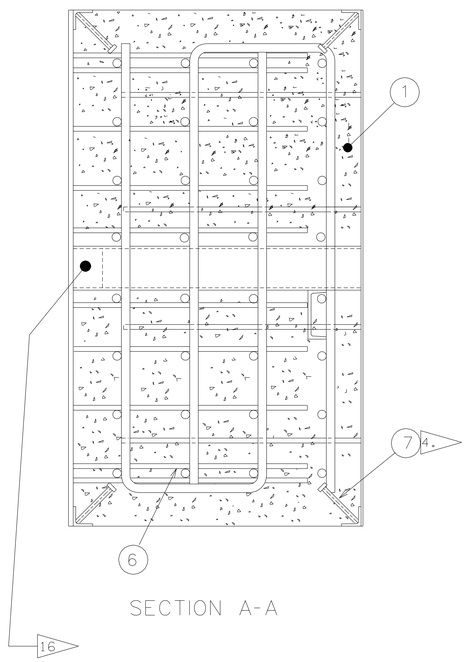

SECTION A-A

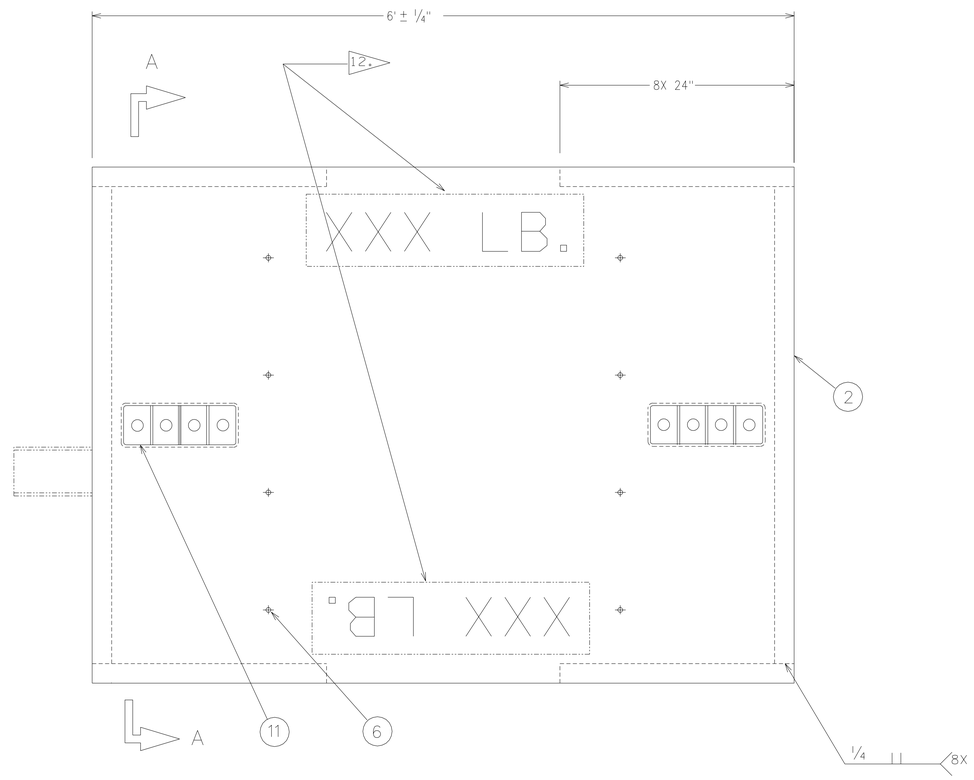

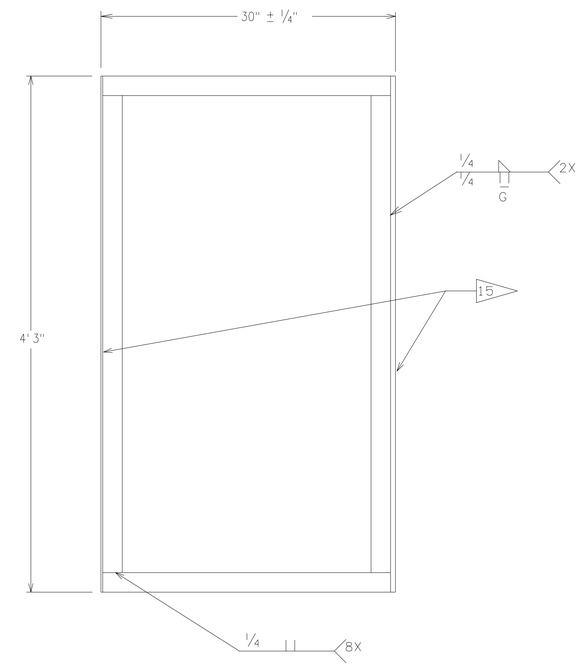

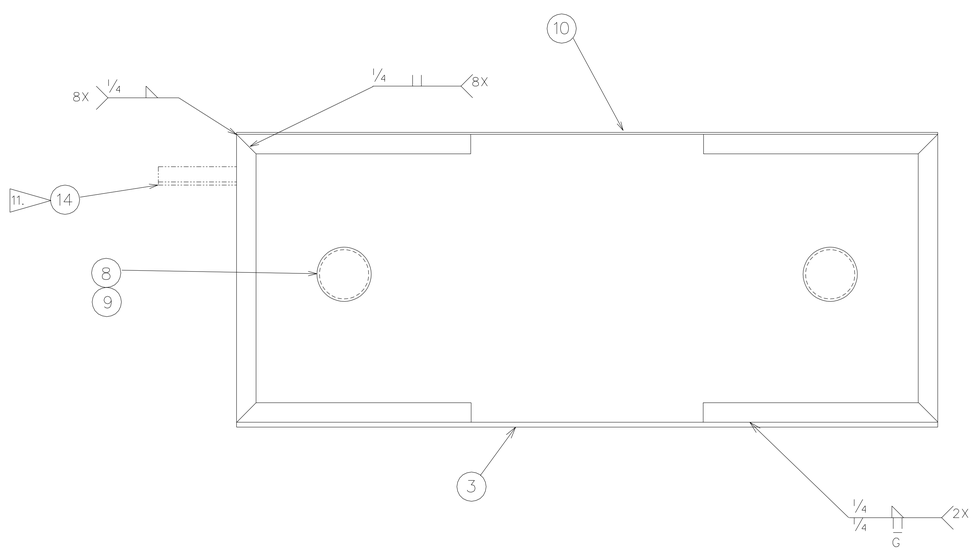

NO REQD	NO REQD	PART/CONTROL NO	DESCRIPTION/MATERIAL	NOTE	SHEET ZONE	ITEM
1			CHANNEL, AMERICAN STANDARD, C5X 9	11.		14
ARS	ARS		POLYURETHANE FOAM SEALANT DOW	16		13
6	6	ASTM A36	STEEL PLATE, 1/4" STOCK THK.			12
2	2		TUBE , RECTANGULAR, STEEL, 4" X 12" X 1/4 WALL			11
1	1	ASTM A572	STEEL, PLATE, 3/16, THK., GRADE 50			10
4	4	ASTM A36	STEEL, PLATE, 1/4THK			9
4	4		PIPE, STEEL, STANDARD WEIGHT, 5" NOM. DIA			8
28	28	101-053-005	HEADED ANCHOR 1/2 X 5-5/16	3,4,6		7
64	64	101-064-796	DEFORMED BAR ANCHOR 1/2 X 24-1/8	3,6		6
40	40	ASTM A615	BAR REINFORCING #7 GRADE 60			5
16	16	ASTM A615	BAR REINFORCING #6 GRADE 60			4
1	1	ASTM A572	PLATE 1/2 IN. STEEL, HIGH STRENGTH, LOW ALLOY GRADE 50			3
AR	AR	ASTM A36	ANGLE 2 X 2 1/4 STEEL			2
AR	AR	9906006	CONCRETE 4000 PSI COMPRESSIVE STRENGTH @ 28 DAYS	10		1
NA	NA	9912119	WELDING STEEL			

R68319-200
R68319-100

SHEET	1	2	3	4	5	6
ISSUE	A	A	A			

PART CLASSIFICATION: SEE TABULATION

TITLE: BLOCK, SHORT, IMF, SPACE COMMAND (U)

DRAWING CLASSIFICATION: UNCLASSIFIED

SIZE: E

DRAWING NUMBER: R68319

CAGEC 14213 | SCALE 1:6 | SHEET 1 OF 3

STATUS: SA-REL-04/11/02 | ORIGIN: SA-MSJ