DESIGN AGENCY PART NUMBER	REVISIONS						
	ISS	SHEET ZONE	PREPARED BY	DESCRIPTION	DATE	CHKR	APVD
SEE TABULATION	A		M. CHAVEZ, 2996/ D. SWAHLAN, 5832				DS

14. WIRE TIE ALL REBAR LAYERS AND WIRE TIE DEFORMED BAR RODS TO REBAR LAYERS.

15. FRONT AND REAR STEEL PLATES ITEMS (3 AND 10) SHALL BE FLAT AND PARALLEL WITHIN + OR - 1/4 IN. FROM THEORETICAL PLANE.

16. AFTER ALL WELDING AND PAINTING IS COMPLETE, FILL VOIDS BETWEEN PLATES (ITEM 12) WITH POLYURETHANE FOAM (ITEM 13).

FOAM IS:

"GREAT STUFF", MINIMAL EXPANDING
DOW CHEMICAL CO.
1881 WEST OAK PARKWAY
MARIETA, GA. 30062

MAY BE PURCHASED AT HOME DEPOT

17. LIGHTLY SANDBLAST ALL EXPOSED STEEL SURFACES BEFORE CLEANING PER TT-C-490D. PRIME STEEL SURFACES PER MIL-PRF-23377, PRIMER COATINGS, EPOXY, HIGH-SOLIDS. TOPCOAT OF EPOXY PAINT PER MIL-PRF-22750F, COATING, EPOXY, HIGH-SOLIDS. COLOR: GRAY LUSTERLESS (36495) PER FED-STD-595. PAINTING ITEMS 8, 9, 11 AND 12 AFTER WELDING, BUT PRIOR TO FINIAL BLOCK ASSEMBLY IS OPTIONAL.

18. POCKET DETAIL IS USED ON PART # R68082-100 ONLY.

8. DIMENSIONAL TOLERANCES SHALL BE AS FOLLOWS: (UNLESS OTHERWISE NOTED)
   A. LINEAR DIMENSIONS ±1/8".
   B. OUT OF SQUARE ±1/8".
   C. ALL SURFACES SHALL BE FLAT WITHIN ±1/8" FROM THEORETICAL PLANE.

9. PROVIDE AT LEAST 1 1/2" COVER BY CONCRETE OF REINFORCING STEEL.

10. MINIMUM CONCRETE REQUIREMENTS:

4000 PSI @ 28 DAYS, 4.5 - 6% ENTRAINED AIR, CURED CONCRETE SHALL NOT EXCEED 142 LB. PER CU. FOOT (EXCLUSIVE OF STEEL REINFORCING). CUSTOMER MAY REQUEST TYPE III, HIGH EARLY STRENGTH CEMENT.

11. THE BASE OF ITEM 5 MAY BE BENT SLIGHTLY TO ALLOW PROPER PLACEMENT OF ITEM 8.

12. APPROX. LOCATION OF PAINTED 4" HIGH NUMBER PAINT BLACK. PAINT FINISHED WEIGHT OF BLOCK ROUNDED TO THE NEAREST 100 #.

13. ALL PRE-CAST SURFACES SHALL BE TREATED WITH AN ACRYLIC SEALER.

NOTES:

1. STEEL EDGES AND SURFACES TO BE GROUND OR PLACED FLUSH TO 1/16 INCH BELOW SURROUNDING CONCRETE SURFACES.

2. DO NOT CHAMFER CONCRETE EDGES, LEAVE SHARP.

3. MANUFACTURED BY NELSON STUD WELDING DIV., TRW INC. 7900 WEST RIDGE, P.O. BOX 4019, ELYRIA, OH 44036.

4. TWO ANCHORS (ITEM 7) PER ANGLE, LOCATED EQUALLY SPACED WITHIN RUN.

5. TACK WELD 100 RANDOM INTERSECTIONS OF ITEMS 4, 5, AND 6.

6. WELD DEFORMED BAR ANCHORS (ITEM 6) TO PLATE (ITEM 3 AND 10): PER MANUFACTURERS INSTRUCTIONS: WELD HEADED ANCHORS (ITEM 7) TO ANGLES (ITEM 2).

7. WELD AND INSPECT PER 9912119, CLASS II, USING E70XX ELECTRODES PER AWS A5.5-81 OR E70S-X ELECTRODES OR RODS PER AWS A5.18-79.

TABULATION		
PART NO.	CLASSIFICATION	POCKETS
R68082-100	UNCLASSIFIED	YES
R68082-200	UNCLASSIFIED	NO

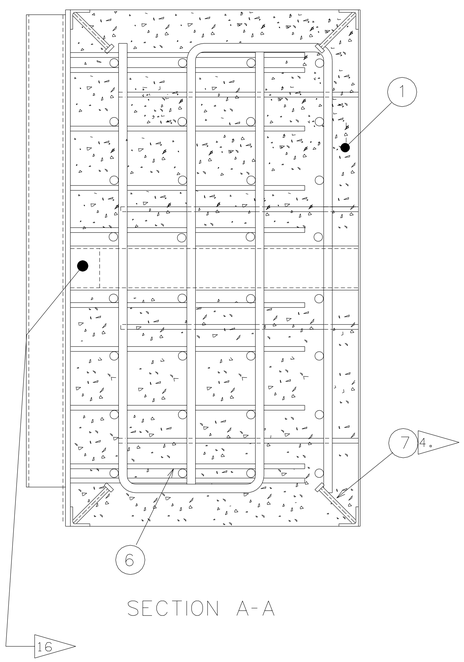

SECTION A-A

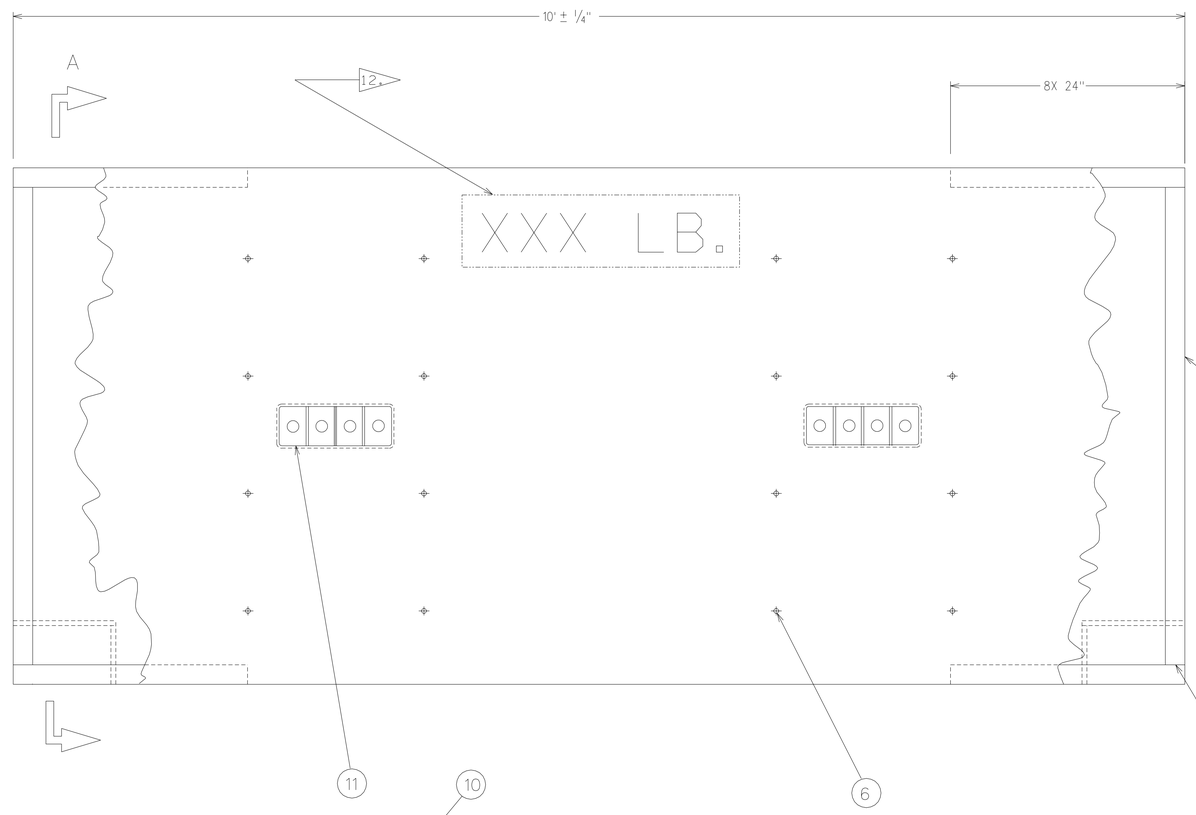

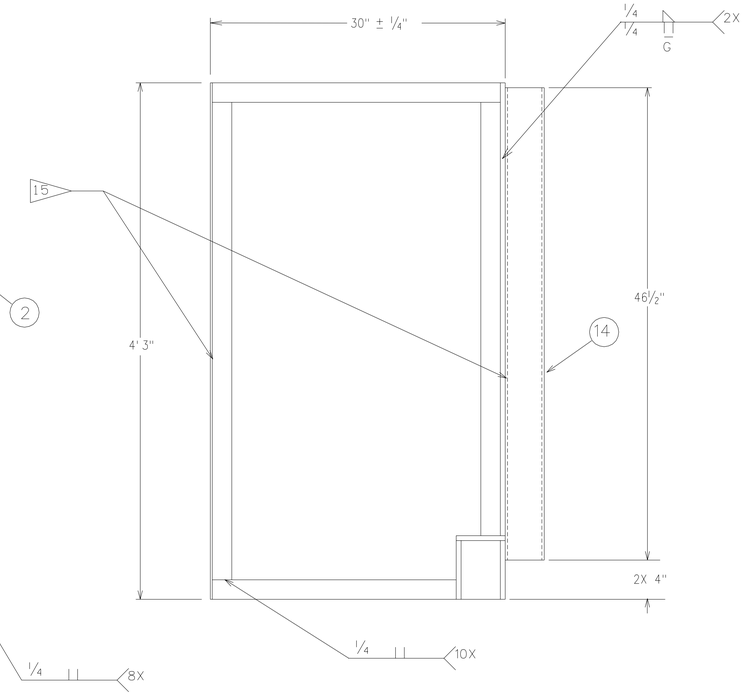

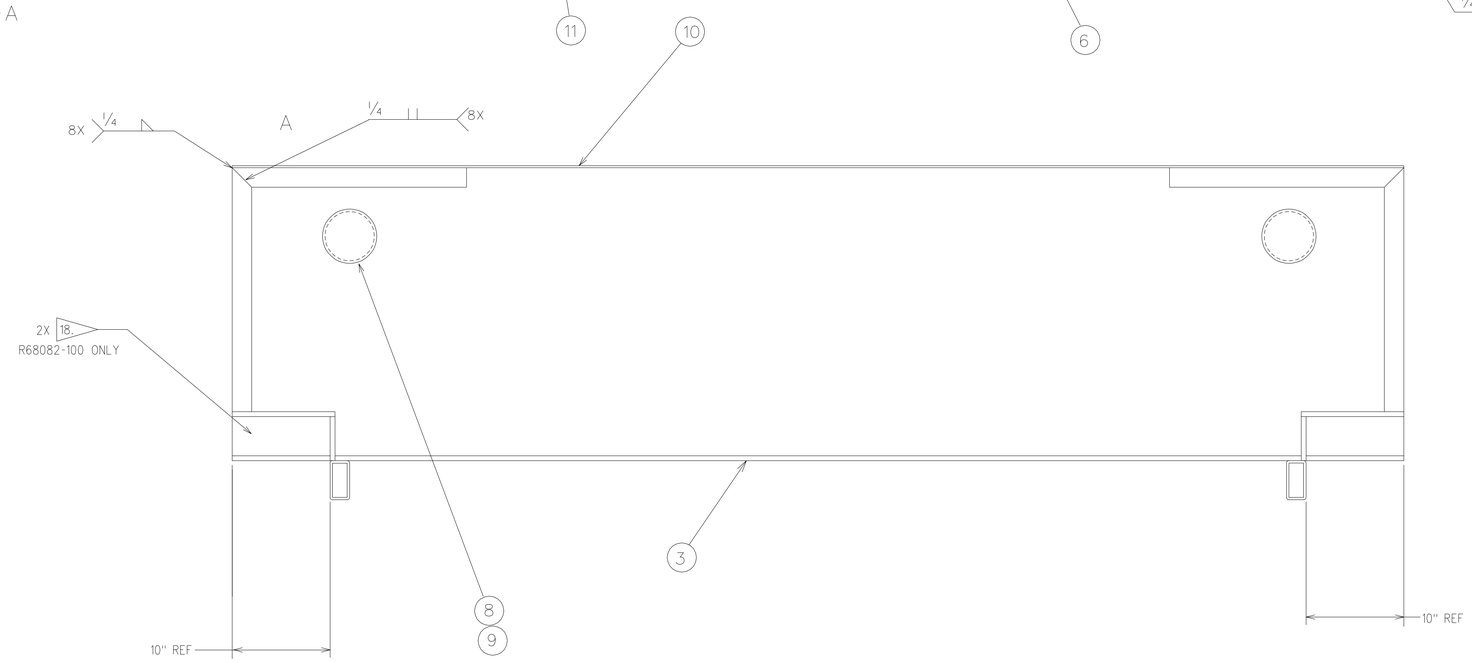

NO REQD R68082-200	NO REQD R68082-100	PART/CONTROL NO	DESCRIPTION/MATERIAL	NOTE	SHEET ZONE	ITEM
	6	ASTM A36	STEEL PLATE, 1/2" STOCK THK.			15
2	2		TUBE, RECTANGULAR, STEEL, 4" X 2" X 1/4" WALL			14
ARS	ARS		POLYURETHANE FOAM SEALANT DOW	16		13
6	6	ASTM A36	STEEL PLATE, 1/4" STOCK THK.			12
2	2		TUBE , RECTANGULAR, STEEL, 4" X 12" X 1/4 WALL			11
1	1	ASTM A572	STEEL, PLATE, 3/16, THK., GRADE 50			10
4	4	ASTM A36	STEEL, PLATE, 1/4THK			9
4	4		PIPE, STEEL, STANDARD WEIGHT, 5" NOM. DIA			8
28	128	101-053-005	HEADED ANCHOR 1/2 X 5-5/16	3,4,6		7
101	101	101-064-796	DEFORMED BAR ANCHOR 1/2 X 24-1/8	3,6		6
40	40	ASTM A615	BAR REINFORCING #7 GRADE 60			5
16	16	ASTM A615	BAR REINFORCING #6 GRADE 60			4
1	1	ASTM A572	PLATE 1/2 IN. STEEL, HIGH STRENGTH, LOW ALLOY GRADE 50			3
AR	AR	ASTM A36	ANGLE 2 X 2 1/4 STEEL			2
AR	AR	9906006	CONCRETE 4000 PSI COMPRESSIVE STRENGTH @ 28 DAYS	10		1
NA	NA	9912119	WELDING STEEL			

SHEET	1	2	3	4	5	6
ISSUE	A	A	A			

TITLE: BLOCK, BUNKER DOORS (U)

PART CLASSIFICATION: SEE TABULATION

DRAWING CLASSIFICATION: UNCLASSIFIED

SIZE: E

DRAWING NUMBER: R68082

CAGEC 14213 | SCALE 1:6 | SHEET 1 OF 3

STATUS: SA-REL-04/11/02 | ORIGIN: SA-MSJ